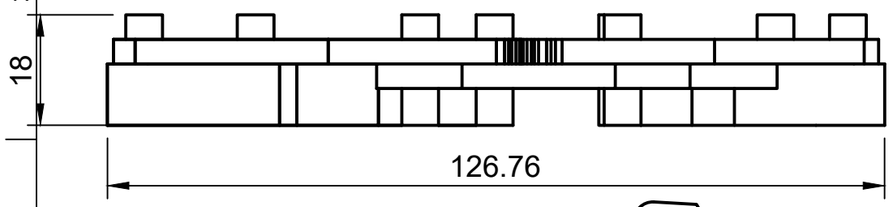

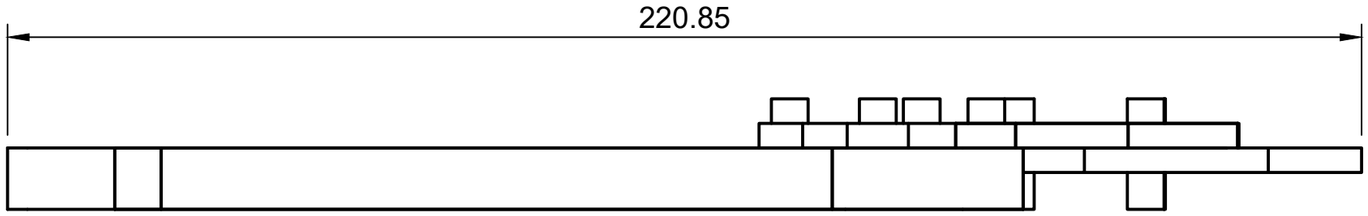

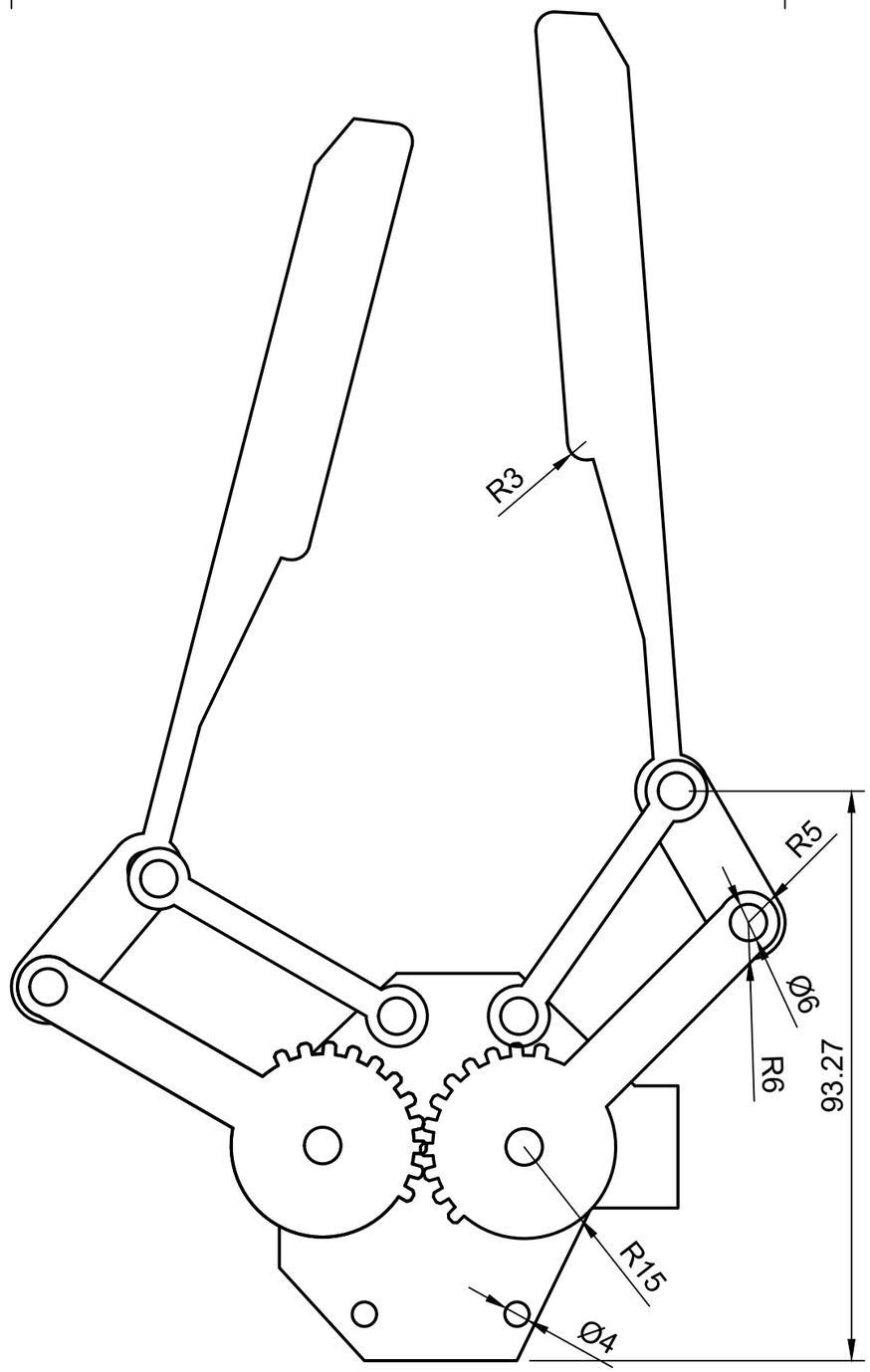

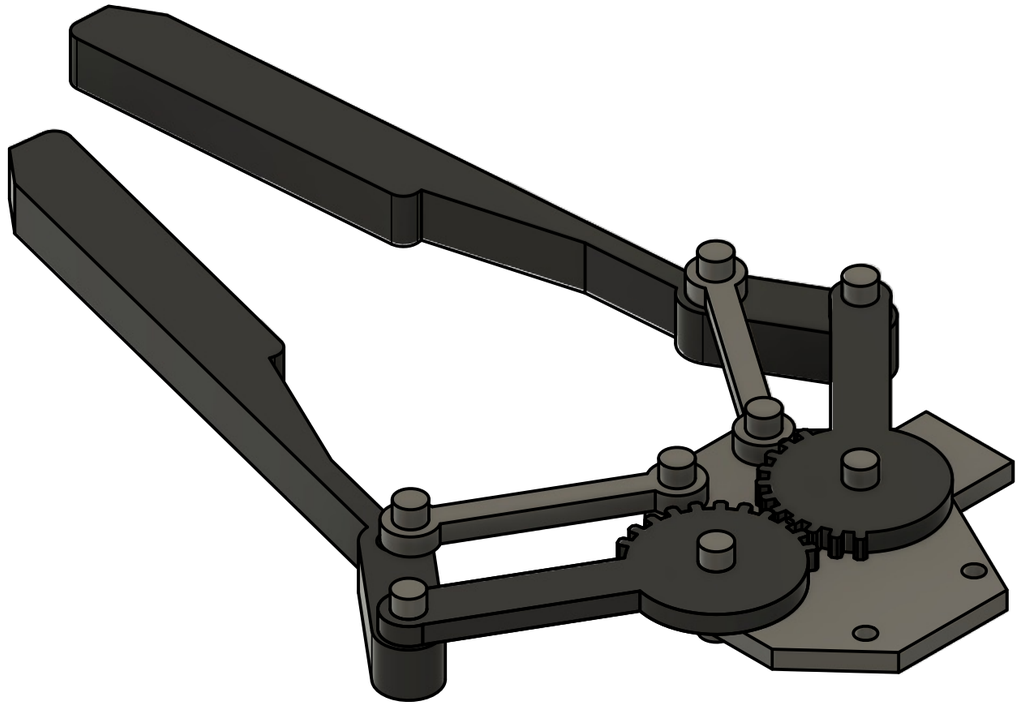

Dept.	Technical reference	Created by	Approved by
AIML	212225240112	RAGUL B	DR.D.SATHISH KUMAR
		Document type	Document status: COMPLETED
		Title: EX. 6.1	DWG No.
			Rev. / Date of issue: 17.02.2026 / Sheet: 1/1